# Harmony

**RONDO**

*SHOWER HEAD*

PRODUCT CODE: 423419

FINISH: BLACK

## TECHNICAL SPECIFICATIONS

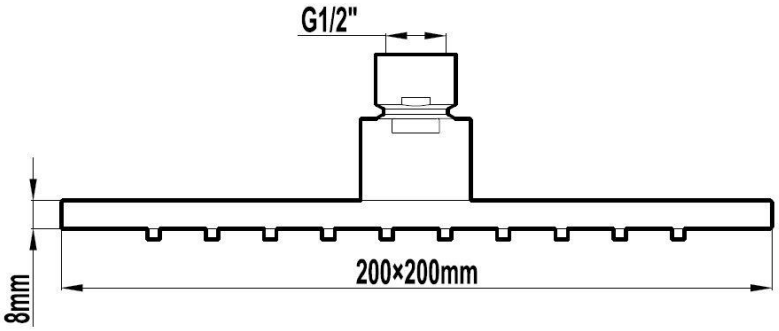


## SPECIFICATIONS

**RANGE:**
RONDO

**PRODUCT:**
SQUARE SHOWER HEAD

**GALVIN CODE**
423419

**AVAILABLE FINISHES:**
BLACK

**WELS RATING:**
3 STARS